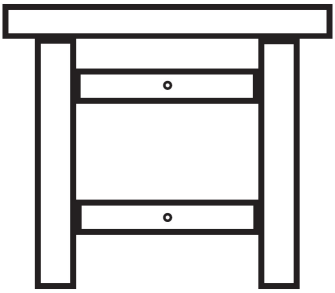

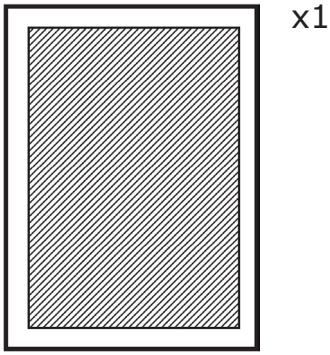

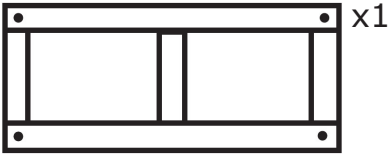

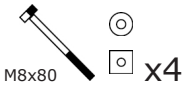

1

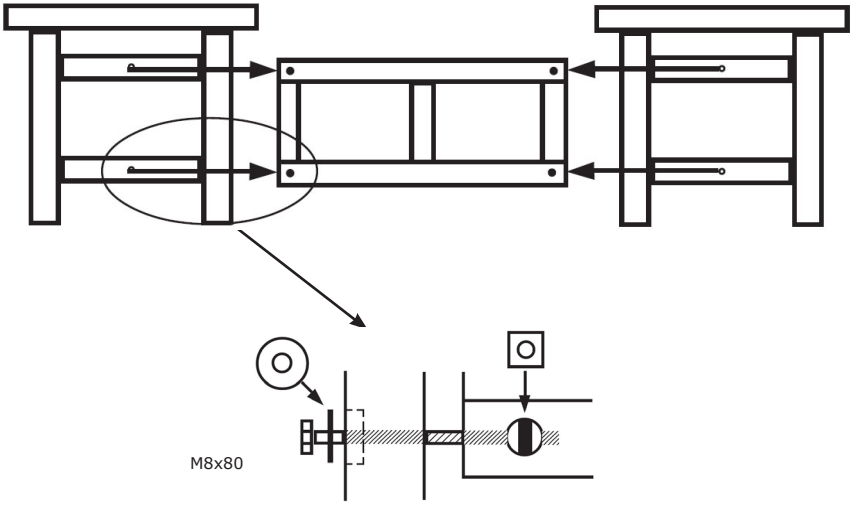
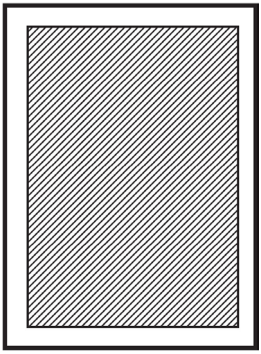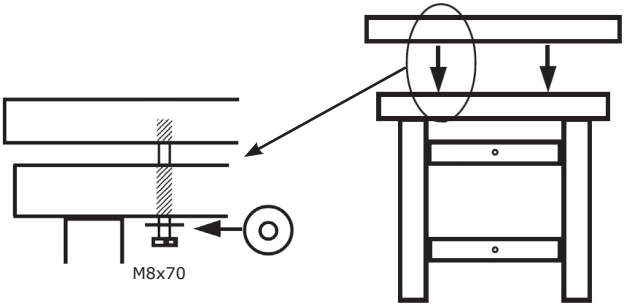
2